Universal S-Blade Electric Fans

Thank you and congratulations for purchasing Aeroflow products.
Fan is suitable to be used for Radiator and/or A/C condensor for cooling.
For further information on Aeroflow products and range go to
www.aeroflowperformance.com or phone +61 2 8825 1900

Fan operation is 12V.
All 7"-16" fans are Reversable.
Fans are ready to be mounted Downstream.
Check clearance before mounting fan/s then choose direction of fan blades for correct operation, simply unscrew 8mm (left hand thread) nut and turn fan blade over keeping in mind polarity BLUE - Positive BLACK - Negative.
Also any obstruction when fitting/mounting fan/s in position - engine pulley/s belts, bonnet etc. Then spin by hand for correct clearance before operating, Fix any wiring.
To confirm airflow and direction airflow MUST flow through the grill/vehicle use a piece of paper to check this.
Airflow MUST direct through grill/vehicle for correct operation.
Relay per fan MUST be used for RELIABLE operation of fan.

TROUBLE SHOOTING
The following notes are designed to help you overcome the most common problems experienced by customers with thermatic fans.

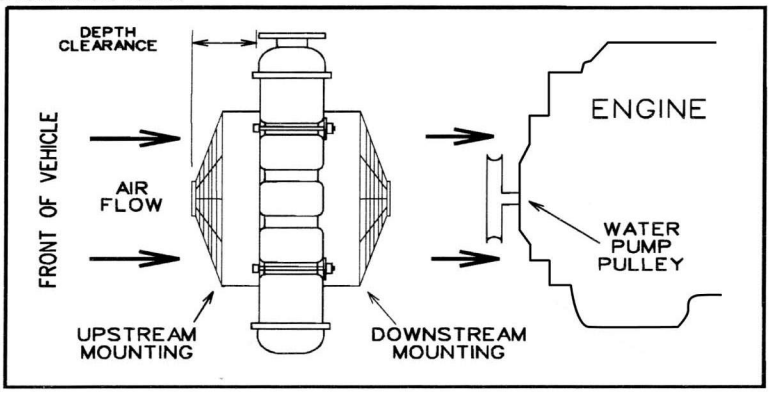

1. FAN RUNS NORMAL BUT ENGINE OVERHEATS
CHECK:
A. Correct model fan is fitted.
B. Thermal switch is set correctly.
C. Fan blade facing the right way and rotating in direction in accordance with the flow chart.
D. Fan/s wired to full 12V power source.
E. Fan too far from radiator
F. Other cooling system problems.

2. FAN RUNS WHEN CAR TRAVELLING AT MEDIUM TO HIGH SPEEDS
CHECK:
A. Adjustment of thermal switch.
B. Is the vehicle towing?
C. Other cooling system faults.

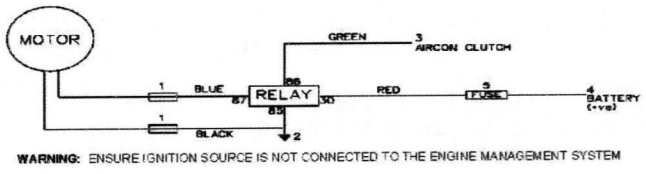

WARNING: ENSURE IGNITION SOURCE IS NOT CONNECTED TO THE ENGINE MANAGEMENT SYSTEM

ONE FAN, CONDENSER ONLY
1 BLUE CONNECTOR
2 SELF TAPPER
3 SCOTCHLOCK
4 RING TERMINAL
5 FUSE HOLDER & FUSE
PURCHASE: 1 FAN KIT

3. FAN DOES NOT RUN OR RUNS SLOWLY
CHECK:
A. Fuses
B. Adjustment of thermal switch - Set too high!
C. Check wiring and confirm polarity in correct positions.
D. Connect motor/s directly to battery then trace wiring towards switch if motor/s run.
E. Check earth connections.